CONSTRUCTION	ROTATION	DISCH PORT
VERTICAL BOTTOM	CLOCKWISE (CW)	LEFT SIDE
	COUNTERCLOCKWISE (CCW)	RIGHT SIDE
VERTICAL TOP	CLOCKWISE (CW)	RIGHT SIDE
	COUNTERCLOCKWISE (CCW)	LEFT SIDE

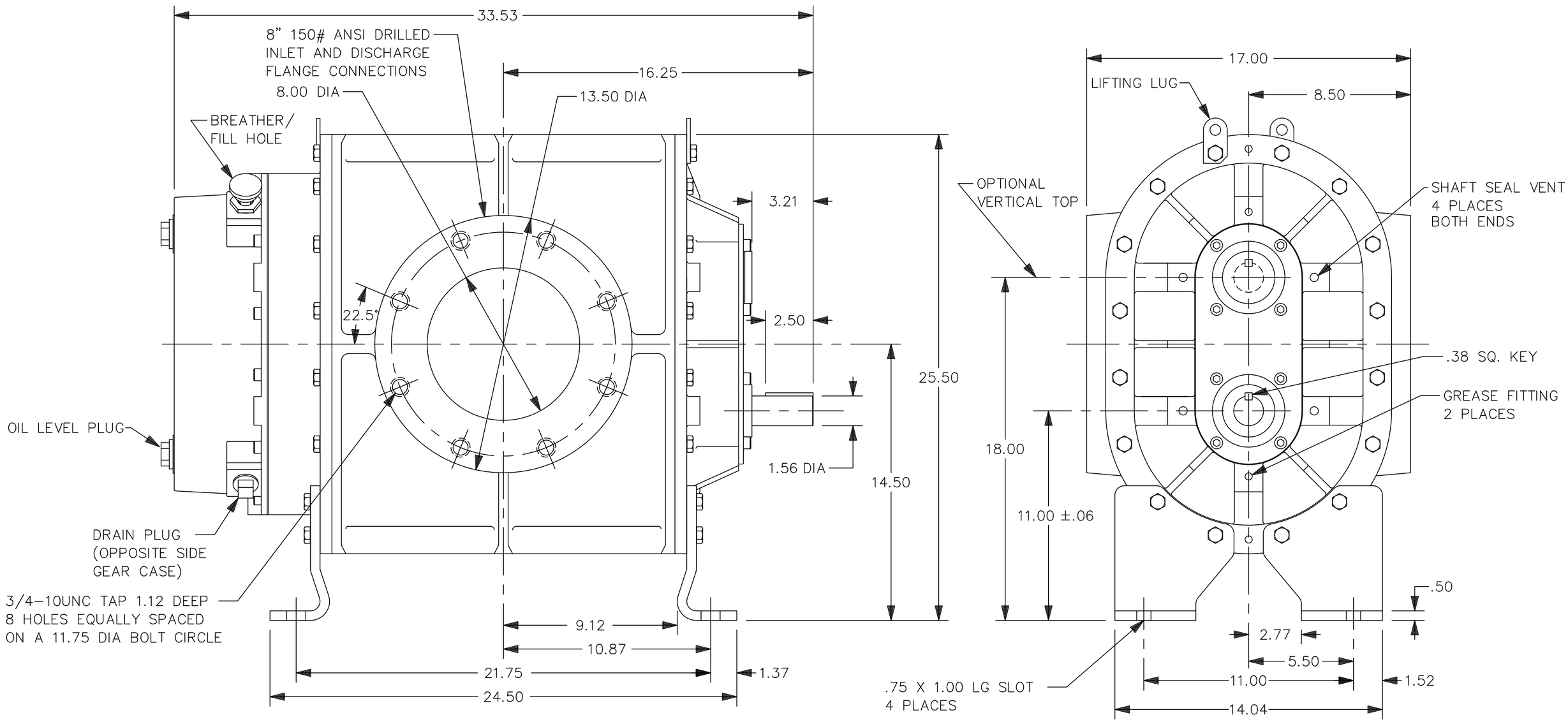

ESTIMATED WEIGHT – 804 LBS

DIMENSIONS AND TOLERANCING PER ASME Y14.5M-1994

CONFIDENTIAL – THE INFORMATION CONTAINED IN THIS DOCUMENT IS THE PROPERTY OF GARDNER DENVER MACHINERY INC. IT IS NOT FOR PUBLIC DISCLOSURE. POSSESSION OF THE INFORMATION DOES NOT CONVEY ANY RIGHT TO LOAN, SELL OR DISCLOSE THE INFORMATION. UNAUTHORIZED REPRODUCTION OR USE OF THE INFORMATION IS PROHIBITED. THIS DOCUMENT IS TO BE RETURNED TO GARDNER DENVER MACHINERY INC. UPON COMPLETION OF THE PURPOSE FOR WHICH IT IS LOANED OR UPON REQUEST.

TAP DRILL DEPTHS ARE MAXIMUM. FULL THD. DEPTHS ARE MINIMUM.

FINISH OF CHAMFERS & FILLETS TO CONFORM TO ROUGHEST ADJACENT AREA

SURFACE ROUGHNESS MAX. PER ASA SPEC.

LET.	REVISION	DATE	DR.	CK.	LET.	REVISION	DATE	DR.	CK.	LET.	REVISION	DATE	DR.	CK.
–	RELEASED (ECN B9604043)													

Gardner Denver

Gardner Denver Inc.
Peachtree City, Georgia

FOR ALL CURRENT SPECIFICATIONS REFER TO BILL OF MATERIAL

NAME OUTLINE–BARE UNIT
MODEL 7LV

TOLERANCES: UNLESS OTHERWISE SPECIFIED
DECIMAL .XX ± .02 .XXX ± .010
NON-DECIMAL ± 1/16 ANGLES ± 1°

DR.	SM	4-18-96	MET. APP.	
CK.	VS	4-19-96	ENG. APP.	–
SCALE	.25			

SHEET 1 OF 1

HEAT TREAT SPEC. –
–

305GAG800

FILE NO. C CAD/CAM