CONSTRUCTION	ROTATION	DISCHARGE PORT
VERTICAL–TOP	CLOCKWISE [CW]	RIGHT
	COUNTER–CLOCKWISE [CCW]	LEFT

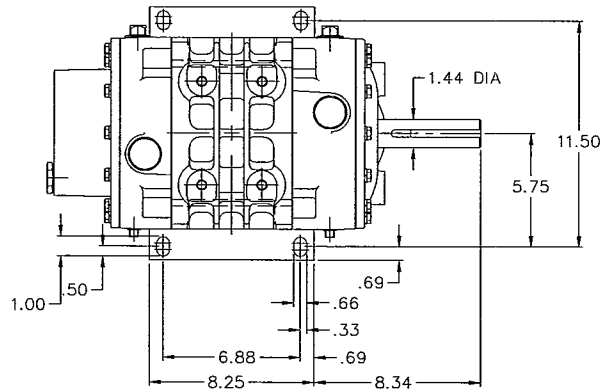

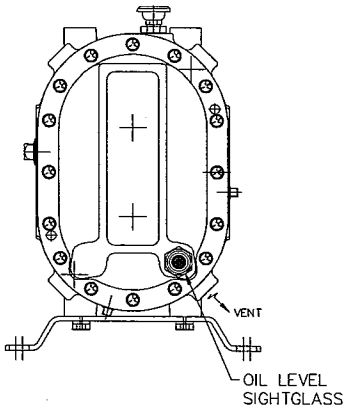

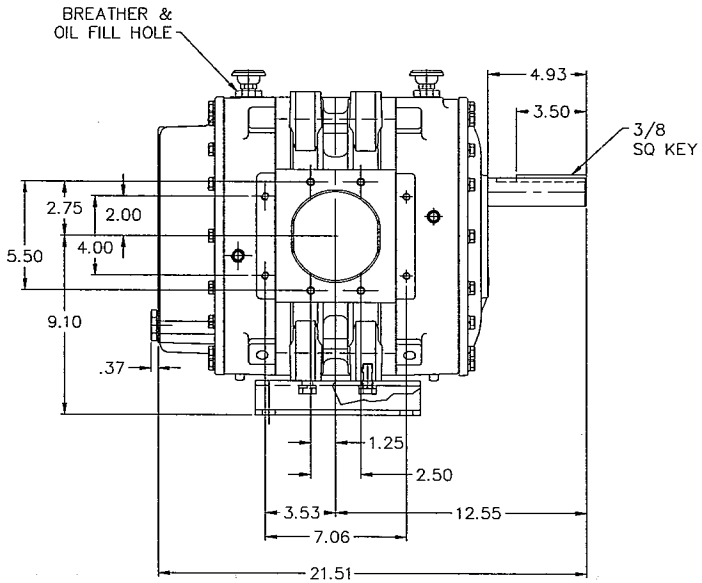

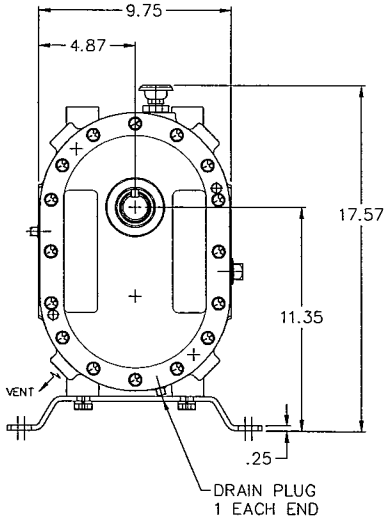

CONFIDENTIAL – THE INFORMATION CONTAINED IN THIS DOCUMENT IS THE PROPERTY OF GARDNER DENVER MACHINERY INC. IT IS NOT FOR PUBLIC DISCLOSURE. POSSESSION OF THE INFORMATION DOES NOT CONVEY ANY RIGHT TO LOAN, SELL OR DISCLOSE THE INFORMATION. UNAUTHORIZED REPRODUCTION OR USE OF THE INFORMATION IS PROHIBITED. THIS DOCUMENT IS TO BE RETURNED TO GARDNER DENVER MACHINERY INC. UPON COMPLETION OF THE PURPOSE FOR WHICH IT IS LOANED OR UPON REQUEST.

TAP DRILL DEPTHS ARE MAXIMUM, FULL THD. DEPTHS ARE MINIMUM.

FINISH OF CHAMFERS & FILLETS TO CONFORM TO ROUGHEST ADJACENT AREA

SURFACE ROUGHNESS MAX. PER ASA SPEC.

LET.	REVISION	DATE	DR.	CK.
A	RELEASED (ECN 1008424)			

Gardner Denver

Gardner Denver Inc.
Peachtree City, Georgia

TOLERANCES: UNLESS OTHERWISE SPECIFIED
DECIMAL .XX ± .02 .XXX ± .010
NON-DECIMAL ± 1/16 ANGLES ± 1°

HEAT TREAT SPEC.

SHEET 1 OF 1

FOR ALL CURRENT SPECIFICATIONS REFER TO BILL OF MATERIAL

NAME OUTLINE–BARE UNIT
4506 VT

DR.	GBS	9-11-00	MFG.
CK.	SWY	9-11-00	ENG.
SCALE	1 = 3		APR.

305GGD800

FILE NO. D CAD/CAM