CONSTRUCTION	ROTATION	DISCH PORT
HORIZONTAL RIGHT	CLOCKWISE (CW)	BOTTOM SIDE
	COUNTERCLOCKWISE (CCW)	TOP SIDE
HORIZONTAL LEFT	CLOCKWISE (CW)	TOP SIDE
	COUNTERCLOCKWISE (CCW)	BOTTOM SIDE

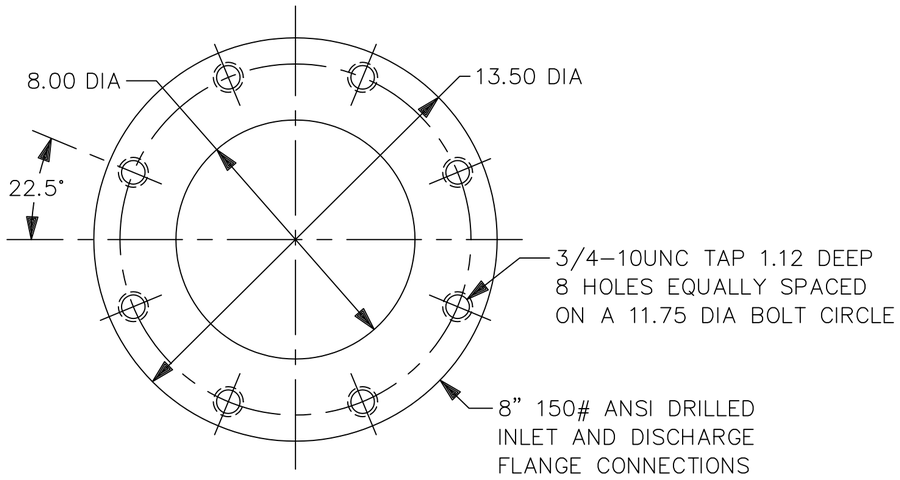

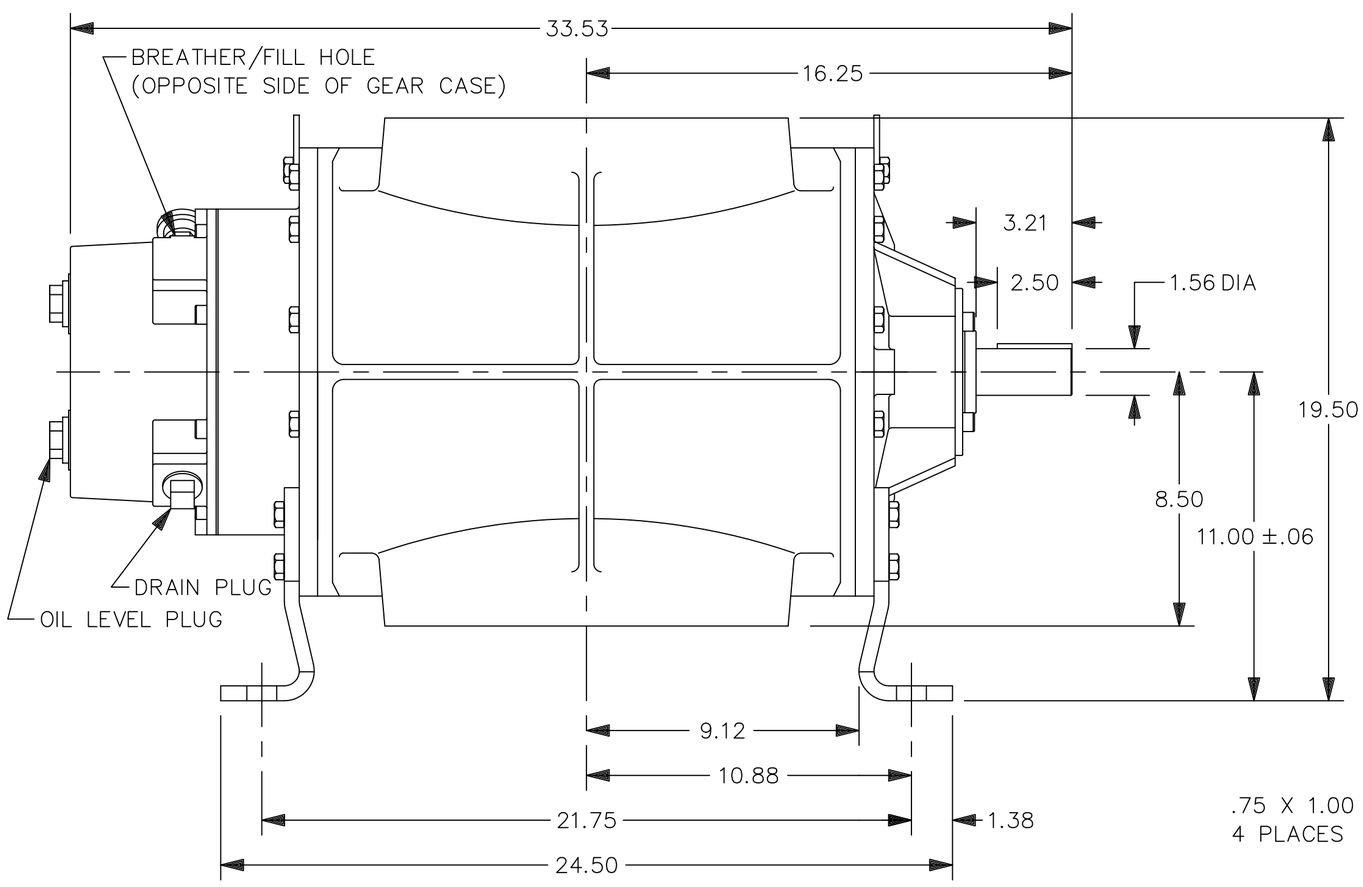

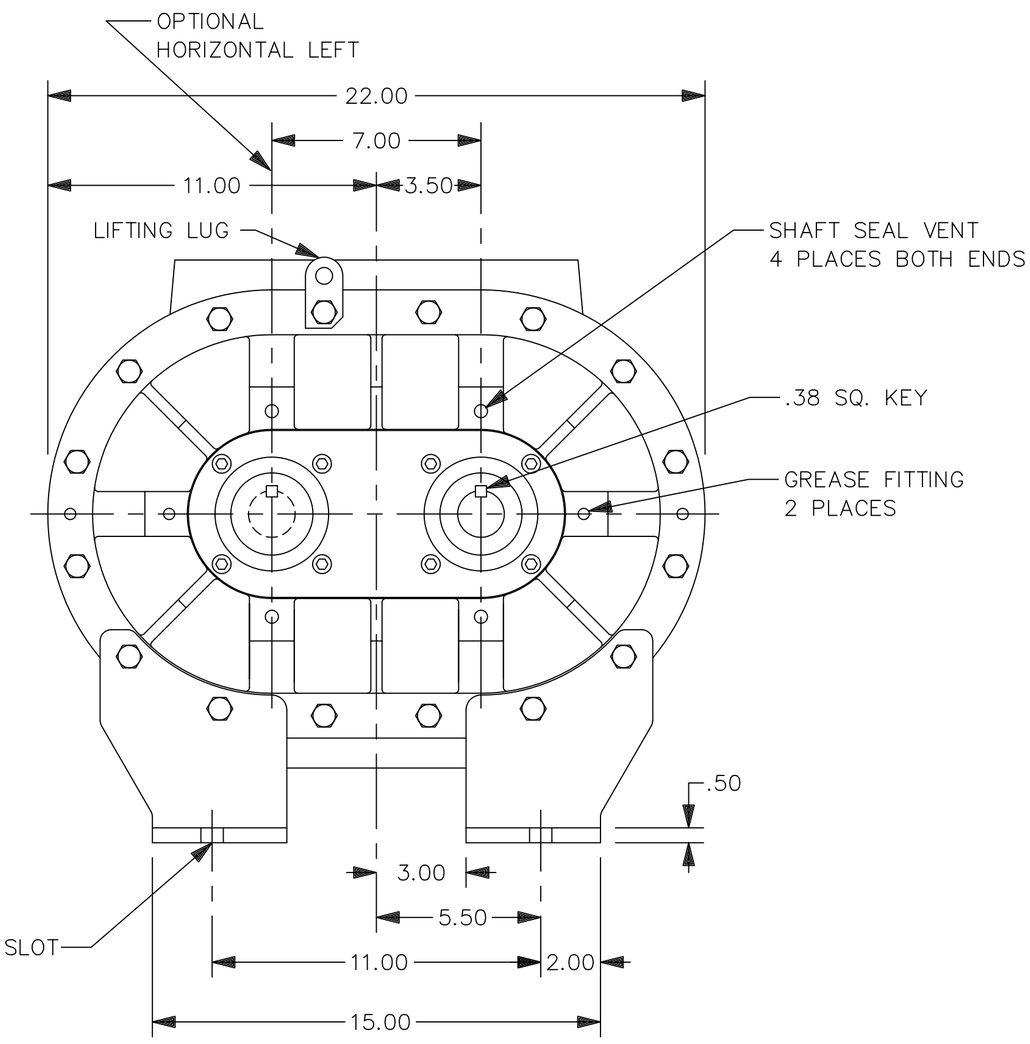

ESTIMATED WEIGHT – 804 LBS

DIMENSIONS AND TOLERANCING PER ASME Y14.5M–1994

CONFIDENTIAL – THE INFORMATION CONTAINED IN THIS DOCUMENT IS THE PROPERTY OF GARDNER DENVER MACHINERY INC. IT IS NOT FOR PUBLIC DISCLOSURE. POSSESSION OF THE INFORMATION DOES NOT CONVEY ANY RIGHT TO LOAN, SELL OR DISCLOSE THE INFORMATION. UNAUTHORIZED REPRODUCTION OR USE OF THE INFORMATION IS PROHIBITED. THIS DOCUMENT IS TO BE RETURNED TO GARDNER DENVER MACHINERY INC. UPON COMPLETION OF THE PURPOSE FOR WHICH IT IS LOANED OR UPON REQUEST.

TAP DRILL DEPTHS ARE MAXIMUM. FULL THD. DEPTHS ARE MINIMUM.

FINISH OF CHAMFERS & FILLETS TO CONFORM TO ROUGHEST ADJACENT AREA

SURFACE ROUGHNESS MAX. PER ASA SPEC.

LET.	REVISION	DATE	DR.	CK.	LET.	REVISION	DATE	DR.	CK.	LET.	REVISION	DATE	DR.	CK.
–	RELEASED (ECN B9604043)													

Gardner Denver

Gardner Denver Inc.
Peachtree City, Georgia

FOR ALL CURRENT SPECIFICATIONS REFER TO BILL OF MATERIAL

NAME OUTLINE–BARE UNIT
MODEL 7L

TOLERANCES: UNLESS OTHERWISE SPECIFIED
DECIMAL .XX ± .02 .XXX ± .010
NON–DECIMAL ± 1/16 ANGLES ± 1°

DR.	SM	4–17–96	MET. APP.	
CK.	VS	4–19–96	ENG. APP.	–
SCALE	.25			

HEAT TREAT SPEC. –
–

SHEET 1 OF 1

302GAG800

FILE NO. C CAD/CAM